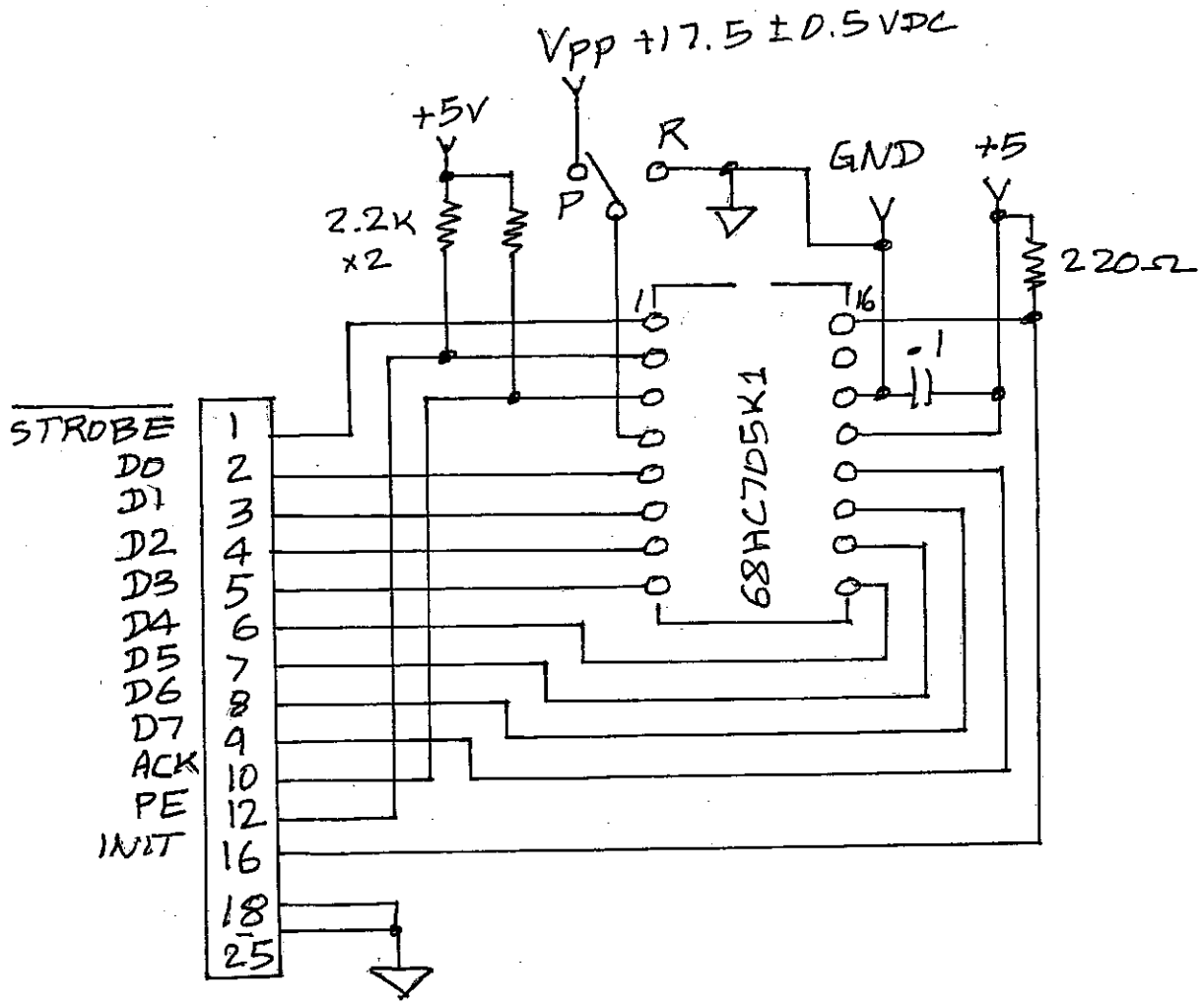

68HC705K1 PROGRAMMER

AMPAD
22-141 50 SHEETS
22-142 100 SHEETS
22-144 200 SHEETS